SEC 8 & SEC 17, T. 30N. R. 5E. W.M.

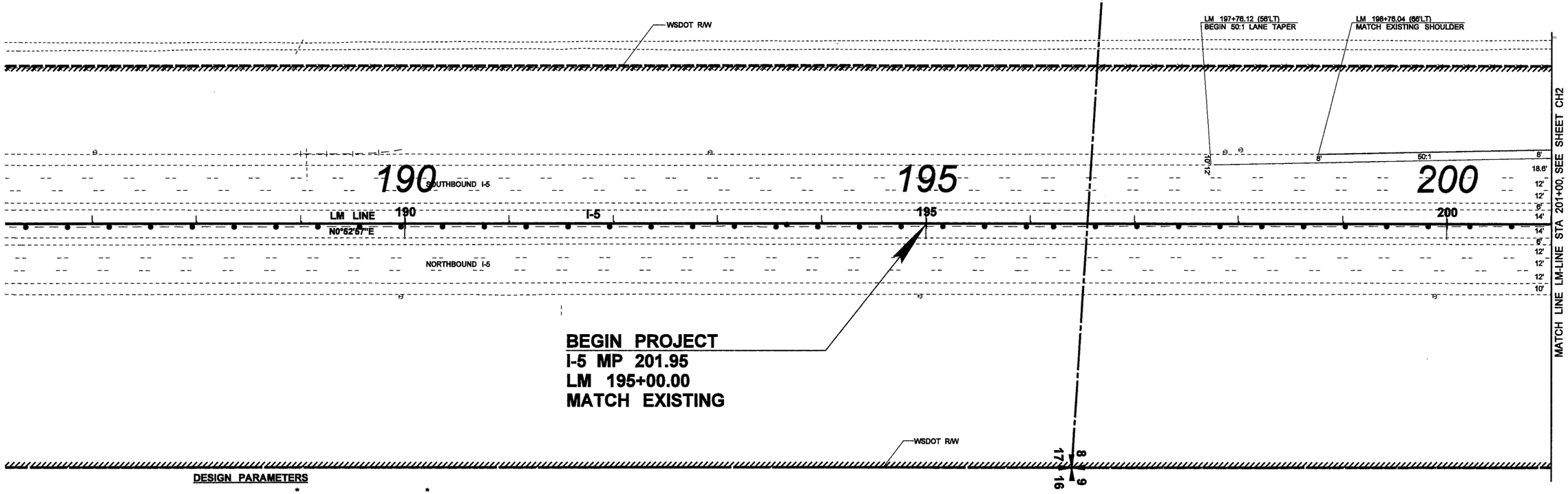

DESIGN PARAMETERS

	I-5 RAMPS	116TH STREET NE *	34TH AVE NE *
FUNCTION CLASS	-	URBAN MINOR ARTERIAL	RURAL MINOR COLLECTOR
DESIGN SPEED	60 MPH	40 MPH	40 MPH
POSTED SPEED	N/A	35 MPH	35 MPH

NOTES:

1. *SNOHOMISH COUNTY DESIGN STANDARDS OUTSIDE WSDOT LIMITED ACCESS.
2. WSDOT DESIGN STANDARDS WITHIN LIMITED ACCESS R/W.
3. DESIGN VEHICLE WB-67 AND I-5 RAMPS.
4. DESIGN VEHICLE WB-50 AT 34TH AVE NE INTERSECTION.
5. DESIGN MATRIX 2, ROW 2-9.
6. ADT: CURRENT = 18848 DESIGN YEAR (2030) = 41654.
7. LAND USE: URBAN.
8. ACCESS CONTROL: I-5 - LIMITED ACCESS, FULL CONTROL
   16TH ST NE - MODIFIED CONTROL, COMMERCIAL ACCESS
9. TRUCK PERCENTAGE: I-5 - 3%
   NB ON-RAMP - 3%
   NB OFF-RAMP - 5%
   SB ON-RAMP - 2%
   SB OFF-RAMP - 6%
   116TH ST NE - 4%

0 50 100
SCALE IN FEET

WSDOT NORTHWEST REGION
CHANNELIZATION PLAN

Approved_____ Date_____
Area Traffic Engineer

Approved_____ Date_____
Area Engineering Manager

FILE NAME	P:\CAD\1598 - Tulalip Tribes\554-1598-026\Phase 17 - 116th IC Design\CHAN\CH001_Ult.dgn				REGION NO. 10	STATE WASH	FED.AID PROJ.NO.
TIME	12:45:59 PM						
DATE	12/31/2008				JOB NUMBER		
PLOTTED BY	tsunmic						
DESIGNED BY	E. YIU						
ENTERED BY	B. PURGANAN				CONTRACT NO.		LOCATION NO.
CHECKED BY	H. LONGFELLOW						
PROJ. ENGR.	M. ABU-NAJEM						
REGIONAL ADM.	L. ENG	REVISION	DATE	BY			

P.E. STAMP BOX DATE

HAPPY DAVID LONGFELLOW STATE OF WASHINGTON 37902 REGISTERED PROFESSIONAL ENGINEER
EXPIRES 12/23/
P.E. STAMP BOX DATE

THE TULALIP TRIBES

Parametrix

I-5 MP 201.95 TO MP 202.99
I-5 116TH ST NE INTERCHANGE
CHANNELIZATION AND WIDENING
SNOHOMISH COUNTY NOVEMBER 2007

CHANNELIZATION PLAN

Plot 1
CH1
SHEET OF SHEETS

CURVE DATA					
P.I. STATION	DELTA	RADIUS	TANGENT	LENGTH	S
ES 115+27.81	5°48'05.2"LT	3012.00'	151.74	303.23	4%
SW 114+63.05	3°51'34.2"RT	3000.00'	101.08	202.08	3%

SEC 8, T. 30N. R. 5E. W.M.

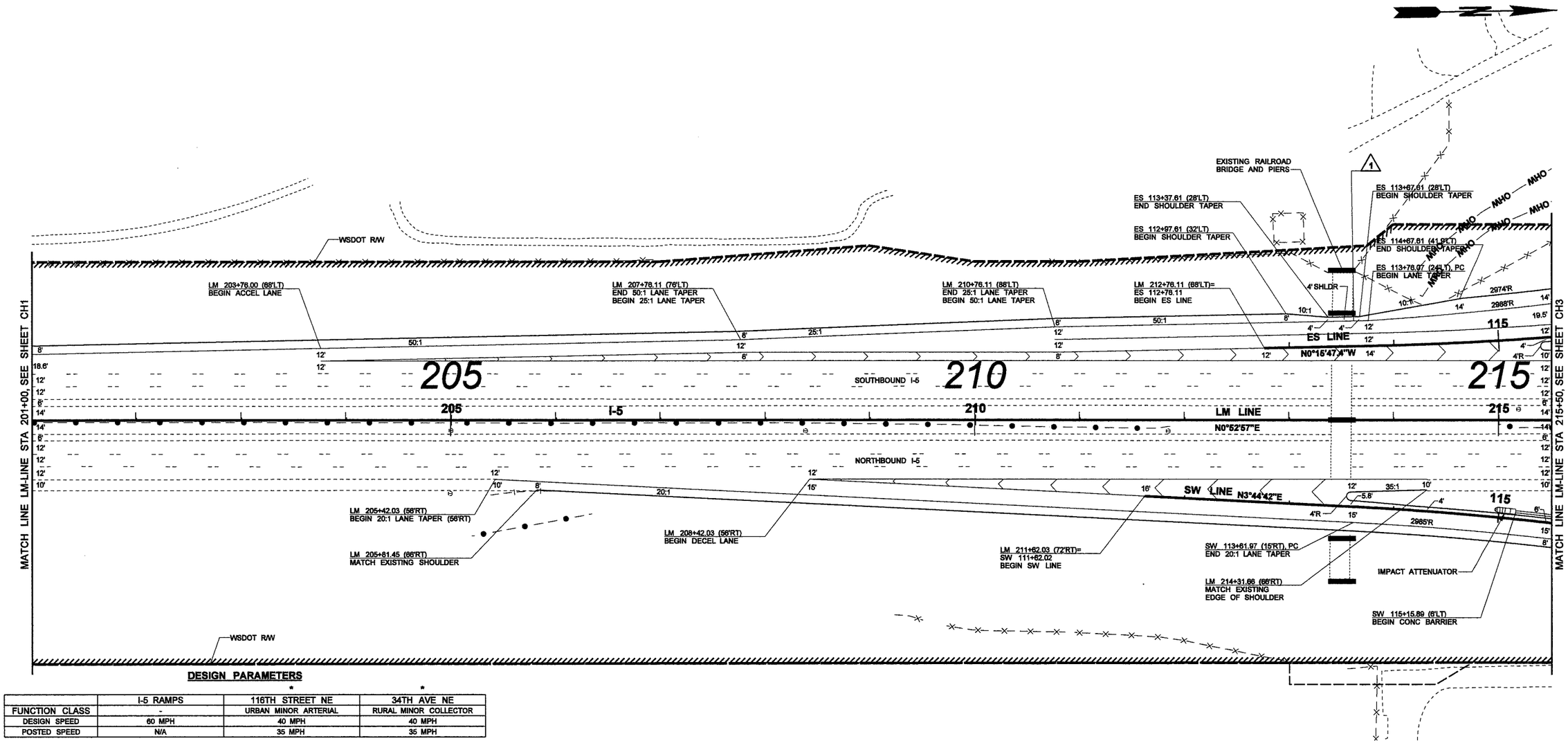

DESIGN PARAMETERS

	I-5 RAMPS	116TH STREET NE *	34TH AVE NE *
FUNCTION CLASS	-	URBAN MINOR ARTERIAL	RURAL MINOR COLLECTOR
DESIGN SPEED	60 MPH	40 MPH	40 MPH
POSTED SPEED	N/A	35 MPH	35 MPH

NOTES:

1. *SNOHOMISH COUNTY DESIGN STANDARDS OUTSIDE WSDOT LIMITED ACCESS.
2. WSDOT DESIGN STANDARDS WITHIN LIMITED ACCESS R/W.
3. DESIGN VEHICLE WB-67 AND I-5 RAMPS.
4. DESIGN VEHICLE WB-50 AT 34TH AVE NE INTERSECTION.
5. DESIGN MATRIX 2, ROW 2-9.
6. ADT: CURRENT = 18848 DESIGN YEAR (2030) = 41654.
7. LAND USE: URBAN.
8. ACCESS CONTROL: I-5 - LIMITED ACCESS, FULL CONTROL
   16TH ST NE - MODIFIED CONTROL, COMMERCIAL ACCESS
9. TRUCK PERCENTAGE: I-5 - 3%
   NB ON-RAMP - 3%
   NB OFF-RAMP - 5%
   SB ON-RAMP - 2%
   SB OFF-RAMP - 6%
   116TH ST NE - 4%

DESIGN VARIANCES

1 DESIGN EXCEPTION: SHOULDER WIDTH. DM 440.09 SHOULDER, MAY 2007.

0 50 100
SCALE IN FEET

WSDOT NORTHWEST REGION
CHANNELIZATION PLAN

Approved_____ Date_____
Area Traffic Engineer

Approved_____ Date_____
Area Engineering Manager

FILE NAME	P:\CAD\1598 - Tulalip Tribes\554-1598-026\Phase 17 - 116th IC Design\CHAN\CH001_Ult.dgn						
TIME	12:46:00 PM				REGION NO. 10	STATE WASH	FED.AID PROJ.NO.
DATE	12/31/2008						
PLOTTED BY	tsunmic				JOB NUMBER		
DESIGNED BY	E. YIU						
ENTERED BY	B. PURGANAN				CONTRACT NO.		LOCATION NO.
CHECKED BY	H. LONGFELLOW						
PROJ. ENGR.	M. ABU-NAJEM						
REGIONAL ADM.	L. ENG	REVISION	DATE	BY			

P.E. STAMP BOX DATE

HAPPY DAVID LONGFELLOW STATE OF WASHINGTON 37902 REGISTERED PROFESSIONAL ENGINEER
EXPIRES 12/23/ DATE
P.E. STAMP BOX

THE TULALIP TRIBES

Parametrix

I-5 MP 201.95 TO MP 202.99
I-5 116TH ST NE INTERCHANGE
CHANNELIZATION AND WIDENING
SNOHOMISH COUNTY NOVEMBER 2007
CHANNELIZATION PLAN

Plot 2
CH2
SHEET OF SHEETS

SEC 8 & SEC 9, T. 30N. R. 5E. W.M.

NOTES:

1. *SNOHOMISH COUNTY DESIGN STANDARDS OUTSIDE WSDOT LIMITED ACCESS.
2. WSDOT DESIGN STANDARDS WITHIN LIMITED ACCESS R/W.
3. DESIGN VEHICLE WB-67 AND I-5 RAMPS.
4. DESIGN VEHICLE WB-50 AT 34TH AVE NE INTERSECTION.
5. DESIGN MATRIX 2, ROW 2-9.
6. ADT: CURRENT = 18848 DESIGN YEAR (2030) = 41654.
7. LAND USE: URBAN.
8. ACCESS CONTROL: I-5 - LIMITED ACCESS, FULL CONTROL
   116TH ST NE - MODIFIED CONTROL, COMMERCIAL ACCESS
9. TRUCK PERCENTAGE: I-5 - 3%
   NB ON-RAMP - 3%
   NB OFF-RAMP - 5%
   SB ON-RAMP - 2%
   SB OFF-RAMP - 6%
   116TH ST NE - 4%

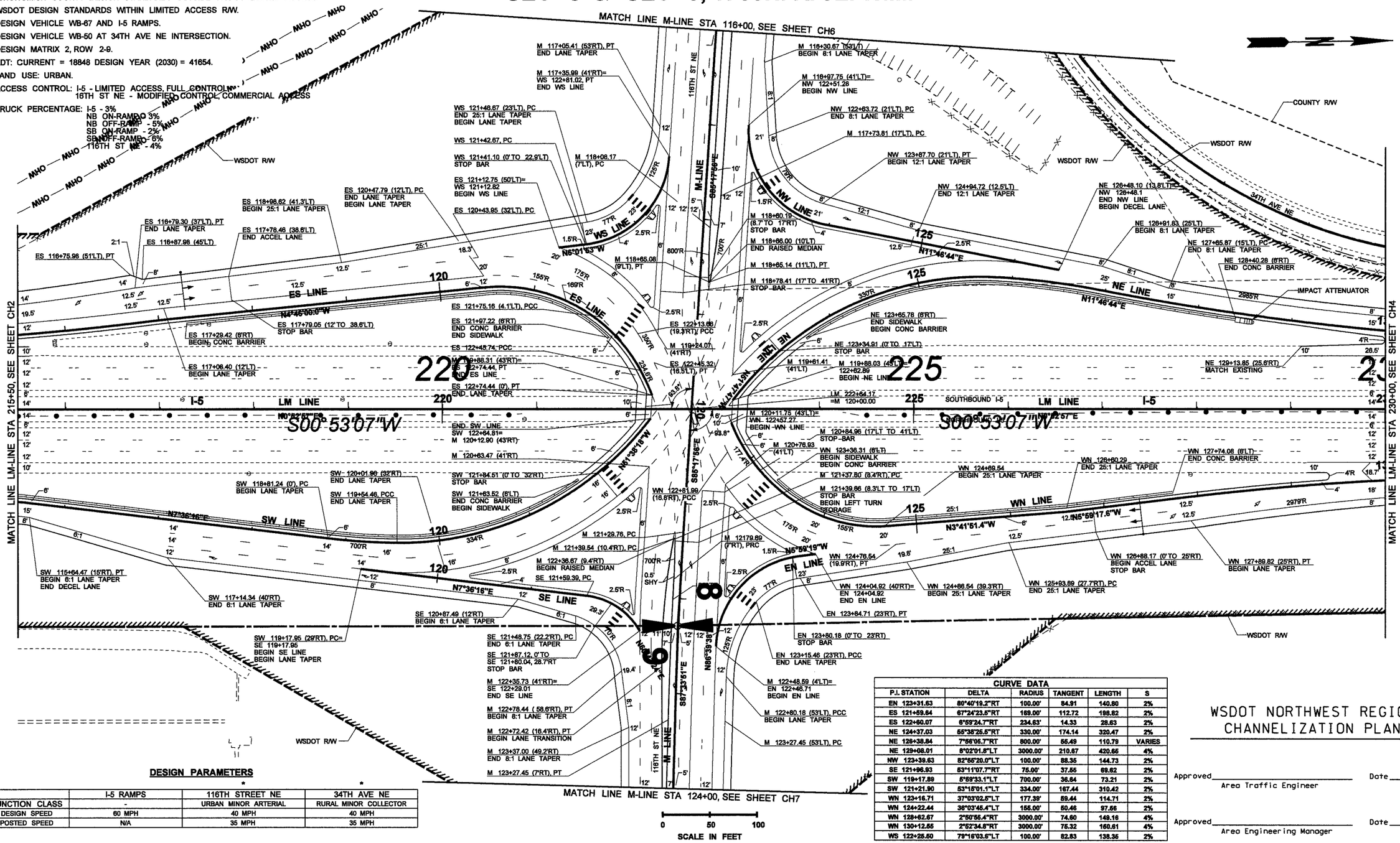

DESIGN PARAMETERS

	I-5 RAMPS	116TH STREET NE *	34TH AVE NE *
FUNCTION CLASS	-	URBAN MINOR ARTERIAL	RURAL MINOR COLLECTOR
DESIGN SPEED	60 MPH	40 MPH	40 MPH
POSTED SPEED	N/A	35 MPH	35 MPH

CURVE DATA

P.I. STATION	DELTA	RADIUS	TANGENT	LENGTH	S
EN 123+31.63	80°40'19.2"RT	100.00'	84.91	140.80	2%
ES 121+59.64	67°24'23.5"RT	169.00'	112.72	198.82	2%
ES 122+60.07	6°59'24.7"RT	234.63'	14.33	28.63	2%
NE 124+37.03	55°38'25.5"RT	330.00'	174.14	320.47	2%
NE 126+38.84	7°56'05.7"RT	800.00'	55.49	110.79	VARIES
NE 129+08.01	8°02'01.8"LT	3000.00'	210.87	420.65	4%
NW 123+39.63	82°55'20.0"LT	100.00'	88.35	144.73	2%
SE 121+96.93	53°11'07.7"RT	75.00'	37.55	69.62	2%
SW 119+17.89	5°59'33.1"LT	700.00'	36.64	73.21	2%
SW 121+21.90	53°15'01.1"LT	334.00'	167.44	310.42	2%
WN 123+16.71	37°03'02.5"LT	177.39'	59.44	114.71	2%
WN 124+22.44	36°03'45.4"LT	155.00'	50.46	97.56	2%
WN 128+62.67	2°50'55.4"RT	3000.00'	74.60	149.16	4%
WN 130+12.55	2°52'34.8"RT	3000.00'	75.32	150.61	4%
WS 122+25.50	79°16'03.6"LT	100.00'	82.83	138.35	2%

WSDOT NORTHWEST REGION
CHANNELIZATION PLAN

Approved _____ Date _____
Area Traffic Engineer

Approved _____ Date _____
Area Engineering Manager

FILE NAME	P:\CAD\1598 - Tulalip Tribes\554-1598-026\Phase 17 - 116th IC Design\CHAN\CH001_Ult.dgn				
TIME	12:46:01 PM				
DATE	12/31/2008				
PLOTTED BY	tsunmic				
DESIGNED BY	E. YIU				
ENTERED BY	B. PURGANAN				
CHECKED BY	H. LONGFELLOW				
PROJ. ENGR.	M. ABU-NAJEM				
REGIONAL ADM.	L. ENG	REVISION	DATE	BY	

REGION NO.	STATE	FED.AID PROJ.NO.
10	WASH	
JOB NUMBER		
CONTRACT NO.		LOCATION NO.

P.E. STAMP BOX DATE

HARRY DAVID LONGFELLOW STATE OF WASHINGTON 37902 REGISTERED PROFESSIONAL ENGINEER
EXPIRES 12/23/
P.E. STAMP BOX DATE

THE TULALIP TRIBES

Parametrix

I-5 MP 201.95 TO MP 202.99
I-5 116TH ST NE INTERCHANGE
CHANNELIZATION AND WIDENING
SNOHOMISH COUNTY NOVEMBER 2007

CHANNELIZATION PLAN

Plot 3
CH3
SHEET OF SHEETS

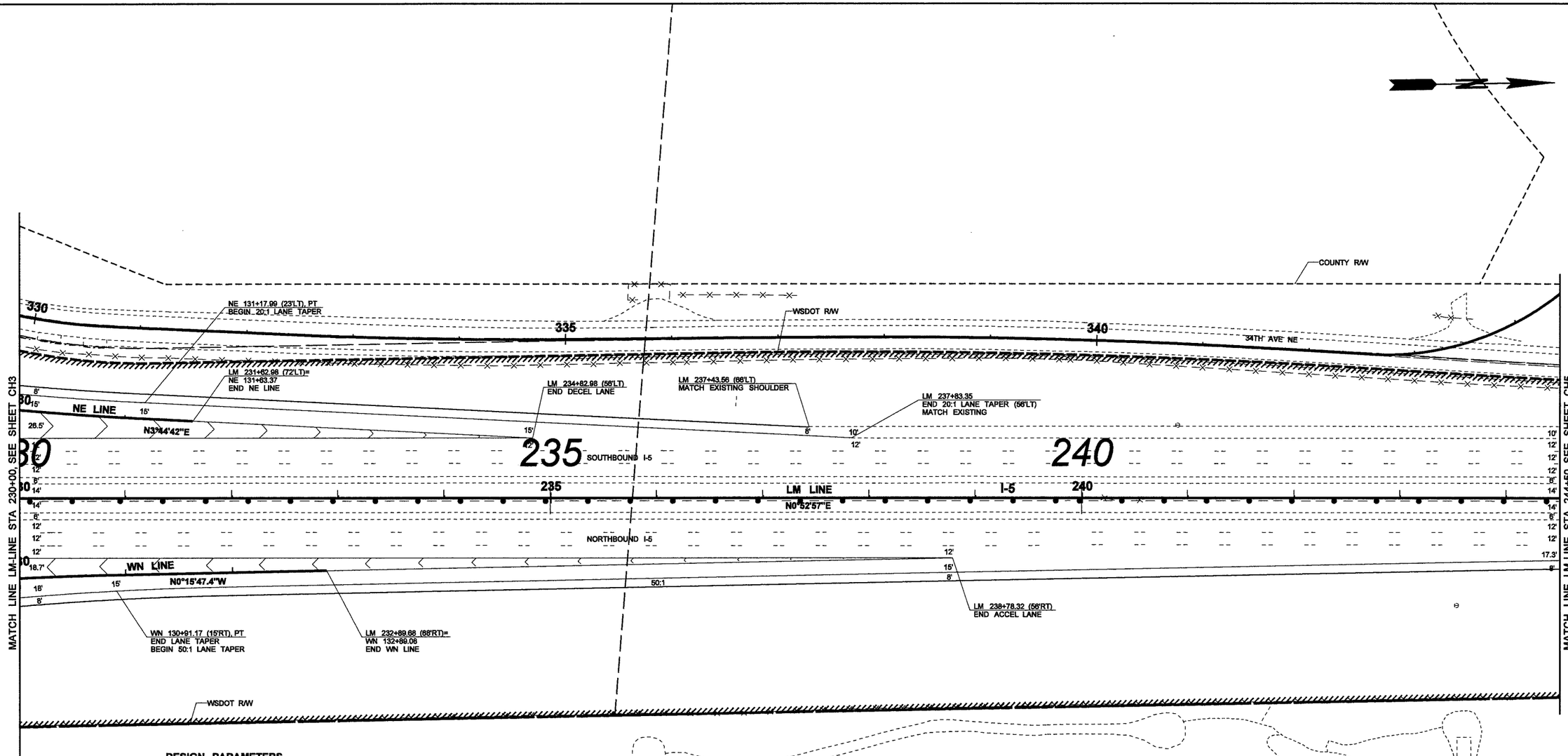

DESIGN PARAMETERS

	I-5 RAMPS	116TH STREET NE *	34TH AVE NE *
FUNCTION CLASS	-	URBAN MINOR ARTERIAL	RURAL MINOR COLLECTOR
DESIGN SPEED	60 MPH	40 MPH	40 MPH
POSTED SPEED	N/A	35 MPH	35 MPH

NOTES:

1. *SNOHOMISH COUNTY DESIGN STANDARDS OUTSIDE WSDOT LIMITED ACCESS.
2. WSDOT DESIGN STANDARDS WITHIN LIMITED ACCESS R/W.
3. DESIGN VEHICLE WB-67 AND I-5 RAMPS.
4. DESIGN VEHICLE WB-50 AT 34TH AVE NE INTERSECTION.
5. DESIGN MATRIX 2, ROW 2-9.
6. ADT: CURRENT = 18848 DESIGN YEAR (2030) = 41654.
7. LAND USE: URBAN.
8. ACCESS CONTROL: I-5 - LIMITED ACCESS, FULL CONTROL
   16TH ST NE - MODIFIED CONTROL, COMMERCIAL ACCESS
9. TRUCK PERCENTAGE: I-5 - 3%
   NB ON-RAMP - 3%
   NB OFF-RAMP - 5%
   SB ON-RAMP - 2%
   SB OFF-RAMP - 6%
   116TH ST NE - 4%

0 50 100
SCALE IN FEET

WSDOT NORTHWEST REGION
CHANNELIZATION PLAN

Approved_____ Date_____
Area Traffic Engineer

Approved_____ Date_____
Area Engineering Manager

FILE NAME	P:\CAD\1598 - Tulalip Tribes\554-1598-026\Phase 17 - 116th IC Design\CHAN\CH001_Ult.dgn						
TIME	12:46:03 PM				REGION NO. 10	STATE WASH	FED.AID PROJ.NO.
DATE	12/31/2008				JOB NUMBER		
PLOTTED BY	tsunmic						
DESIGNED BY	E. YIU						
ENTERED BY	B. PURGANAN						
CHECKED BY	H. LONGFELLOW				CONTRACT NO.		LOCATION NO.
PROJ. ENGR.	M. ABU-NAJEM						
REGIONAL ADM.	L. ENG	REVISION	DATE	BY			

P.E. STAMP BOX DATE

HAPPY DAVID LONGFELLOW STATE OF WASHINGTON 37602 REGISTERED PROFESSIONAL ENGINEER
EXPIRES 12/23/
P.E. STAMP BOX DATE

THE TULALIP TRIBES

Parametrix

I-5 MP 201.95 TO MP 202.99
I-5 116TH ST NE INTERCHANGE
CHANNELIZATION AND WIDENING
SNOHOMISH COUNTY NOVEMBER 2007

CHANNELIZATION PLAN

Plot 4
CH4
SHEET OF SHEETS

SEC 8 & SEC 5, T. 30N. R. 5E. W.M.

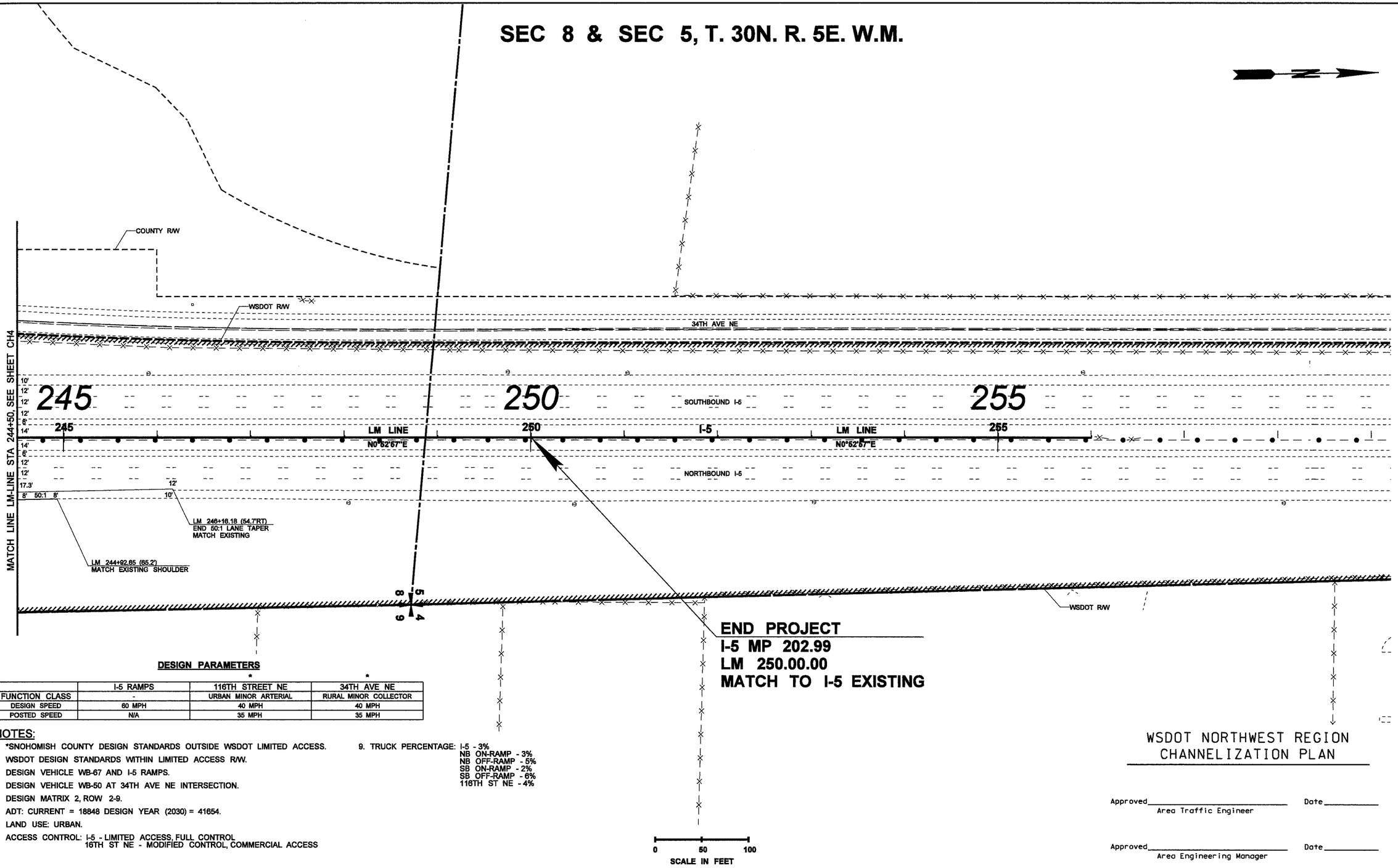

DESIGN PARAMETERS

	I-5 RAMPS	116TH STREET NE *	34TH AVE NE *
FUNCTION CLASS	-	URBAN MINOR ARTERIAL	RURAL MINOR COLLECTOR
DESIGN SPEED	60 MPH	40 MPH	40 MPH
POSTED SPEED	N/A	35 MPH	35 MPH

NOTES:

1. *SNOHOMISH COUNTY DESIGN STANDARDS OUTSIDE WSDOT LIMITED ACCESS.
2. WSDOT DESIGN STANDARDS WITHIN LIMITED ACCESS R/W.
3. DESIGN VEHICLE WB-67 AND I-5 RAMPS.
4. DESIGN VEHICLE WB-50 AT 34TH AVE NE INTERSECTION.
5. DESIGN MATRIX 2, ROW 2-9.
6. ADT: CURRENT = 18848 DESIGN YEAR (2030) = 41654.
7. LAND USE: URBAN.
8. ACCESS CONTROL: I-5 - LIMITED ACCESS, FULL CONTROL
   16TH ST NE - MODIFIED CONTROL, COMMERCIAL ACCESS
9. TRUCK PERCENTAGE: I-5 - 3%
   NB ON-RAMP - 3%
   NB OFF-RAMP - 5%
   SB ON-RAMP - 2%
   SB OFF-RAMP - 6%
   116TH ST NE - 4%

WSDOT NORTHWEST REGION
CHANNELIZATION PLAN

Approved_____ Date_____
Area Traffic Engineer

Approved_____ Date_____
Area Engineering Manager

FILE NAME	P:\CAD\1598 - Tulalip Tribes\554-1598-026\Phase 17 - 116th IC Design\CHAN\CH001_Ult.dgn				REGION NO. 10	STATE WASH	FED.AID PROJ.NO.
TIME	12:46:04 PM				JOB NUMBER		
DATE	12/31/2008						
PLOTTED BY	tsunmic						
DESIGNED BY	E. YIU				CONTRACT NO.		LOCATION NO.
ENTERED BY	B. PURGANAN						
CHECKED BY	H. LONGFELLOW						
PROJ. ENGR.	M. ABU-NAJEM						
REGIONAL ADM.	L. ENG	REVISION	DATE	BY			

DATE
P.E. STAMP BOX

HARRY DAVID LONGFELLOW
STATE OF WASHINGTON
37902
REGISTERED
PROFESSIONAL ENGINEER
EXPIRES 12/23/
DATE
P.E. STAMP BOX

THE TULALIP TRIBES

Parametrix

I-5 MP 201.95 TO MP 202.99
I-5 116TH ST NE INTERCHANGE
CHANNELIZATION AND WIDENING
SNOHOMISH COUNTY NOVEMBER 2007

CHANNELIZATION PLAN

Plot 5
CH5
SHEET OF SHEETS

CURVE DATA					
P.I. STATION	DELTA	RADIUS	TANGENT	LENGTH	S
A 322+18.31	62°32' 16.2"RT	200'	98.71	183.39	4%
A 328+34.96	53°26'52.6"LT	545'	274.39	508.40	9%
US 321+15.78	28°26'04.0"RT	310'	78.54	153.85	N.C.

SEC 8, T. 30N. R. 5E. W.M.

DESIGN PARAMETERS

	I-5 RAMPS	116TH STREET NE *	34TH AVE NE *
FUNCTION CLASS	-	URBAN MINOR ARTERIAL	RURAL MINOR COLLECTOR
DESIGN SPEED	60 MPH	40 MPH	40 MPH
POSTED SPEED	N/A	35 MPH	35 MPH

NOTES:

1. *SNOHOMISH COUNTY DESIGN STANDARDS OUTSIDE WSDOT LIMITED ACCESS.
2. WSDOT DESIGN STANDARDS WITHIN LIMITED ACCESS R/W.
3. DESIGN VEHICLE WB-67 AND I-5 RAMPS.
4. DESIGN VEHICLE WB-50 AT 34TH AVE NE INTERSECTION.
5. DESIGN MATRIX 2, ROW 2-9.
6. ADT: CURRENT = 18848 DESIGN YEAR (2030) = 41654.
7. LAND USE: URBAN.
8. ACCESS CONTROL: I-5 - LIMITED ACCESS, FULL CONTROL
   16TH ST NE - MODIFIED CONTROL, COMMERCIAL ACCESS
9. TRUCK PERCENTAGE: I-5 - 3%
   NB ON-RAMP - 3%
   NB OFF-RAMP - 5%
   SB ON-RAMP - 2%
   SB OFF-RAMP - 6%
   116TH ST NE - 4%

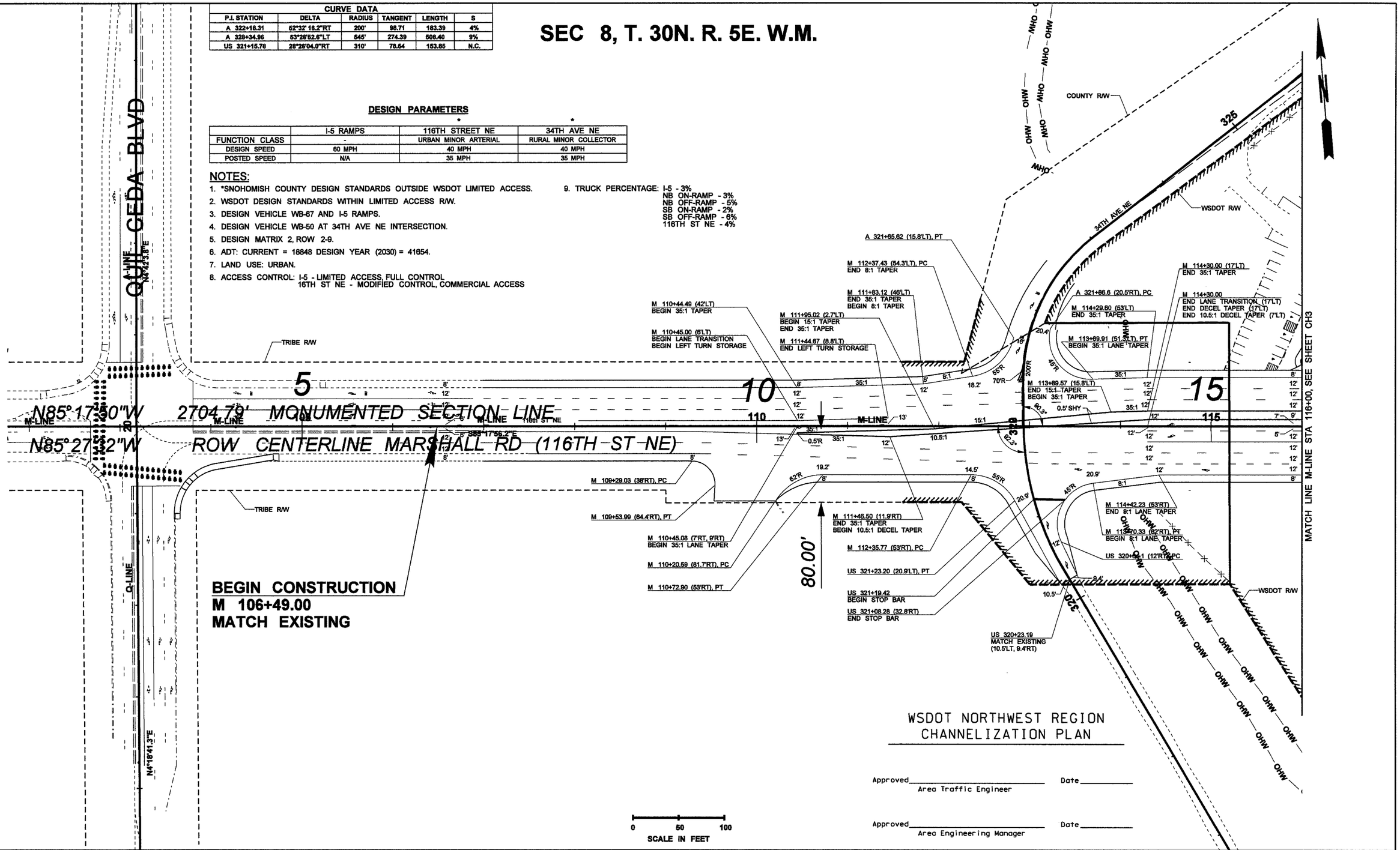

WSDOT NORTHWEST REGION
CHANNELIZATION PLAN

Approved_____ Date_____
Area Traffic Engineer

Approved_____ Date_____
Area Engineering Manager

FILE NAME	P:\CAD\1598 - Tulalip Tribes\554-1598-026\Phase 17 - 116th IC Design\CHAN\CH001_Ult.dgn				REGION NO. 10	STATE WASH	FED.AID PROJ.NO.
TIME	12:46:05 PM				JOB NUMBER		
DATE	12/31/2008						
PLOTTED BY	tsunmic						
DESIGNED BY	E. YIU				CONTRACT NO.		LOCATION NO.
ENTERED BY	B. PURGANAN						
CHECKED BY	H. LONGFELLOW						
PROJ. ENGR.	M. ABU-NAJEM						
REGIONAL ADM.	L. ENG	REVISION	DATE	BY			

P.E. STAMP BOX DATE

HAPPY DAVID LONGFELLOW STATE OF WASHINGTON 37902 REGISTERED PROFESSIONAL ENGINEER
EXPIRES 12/23/
P.E. STAMP BOX DATE

THE TULALIP TRIBES

Parametrix

I-5 MP 201.95 TO MP 202.99
I-5 116TH ST NE INTERCHANGE
CHANNELIZATION AND WIDENING
SNOHOMISH COUNTY NOVEMBER 2007

CHANNELIZATION PLAN

Plot 6
CH6
SHEET OF SHEETS

SEC 9, T. 30N. R. 5E. W.M.

FOUND & HELD
PIN IN 2" IRON PIPE
IN WSDOT MON CASE
M 22+28.62 P.I.

DESIGN PARAMETERS

	I-5 RAMPS	116TH STREET NE *	34TH AVE NE *
FUNCTION CLASS	-	URBAN MINOR ARTERIAL	RURAL MINOR COLLECTOR
DESIGN SPEED	60 MPH	40 MPH	40 MPH
POSTED SPEED	N/A	35 MPH	35 MPH

NOTES:

1. *SNOHOMISH COUNTY DESIGN STANDARDS OUTSIDE WSDOT LIMITED ACCESS.
2. WSDOT DESIGN STANDARDS WITHIN LIMITED ACCESS R/W.
3. DESIGN VEHICLE WB-67 AND I-5 RAMPS.
4. DESIGN VEHICLE WB-50 AT 34TH AVE NE INTERSECTION.
5. DESIGN MATRIX 2, ROW 2-9.
6. ADT: CURRENT = 18848 DESIGN YEAR (2030) = 41654.
7. LAND USE: URBAN.
8. ACCESS CONTROL: I-5 - LIMITED ACCESS, FULL CONTROL
   16TH ST NE - MODIFIED CONTROL, COMMERCIAL ACCESS
9. TRUCK PERCENTAGE: I-5 - 3%
   NB ON-RAMP - 3%
   NB OFF-RAMP - 5%
   SB ON-RAMP - 2%
   SB OFF-RAMP - 6%
   116TH ST NE - 4%

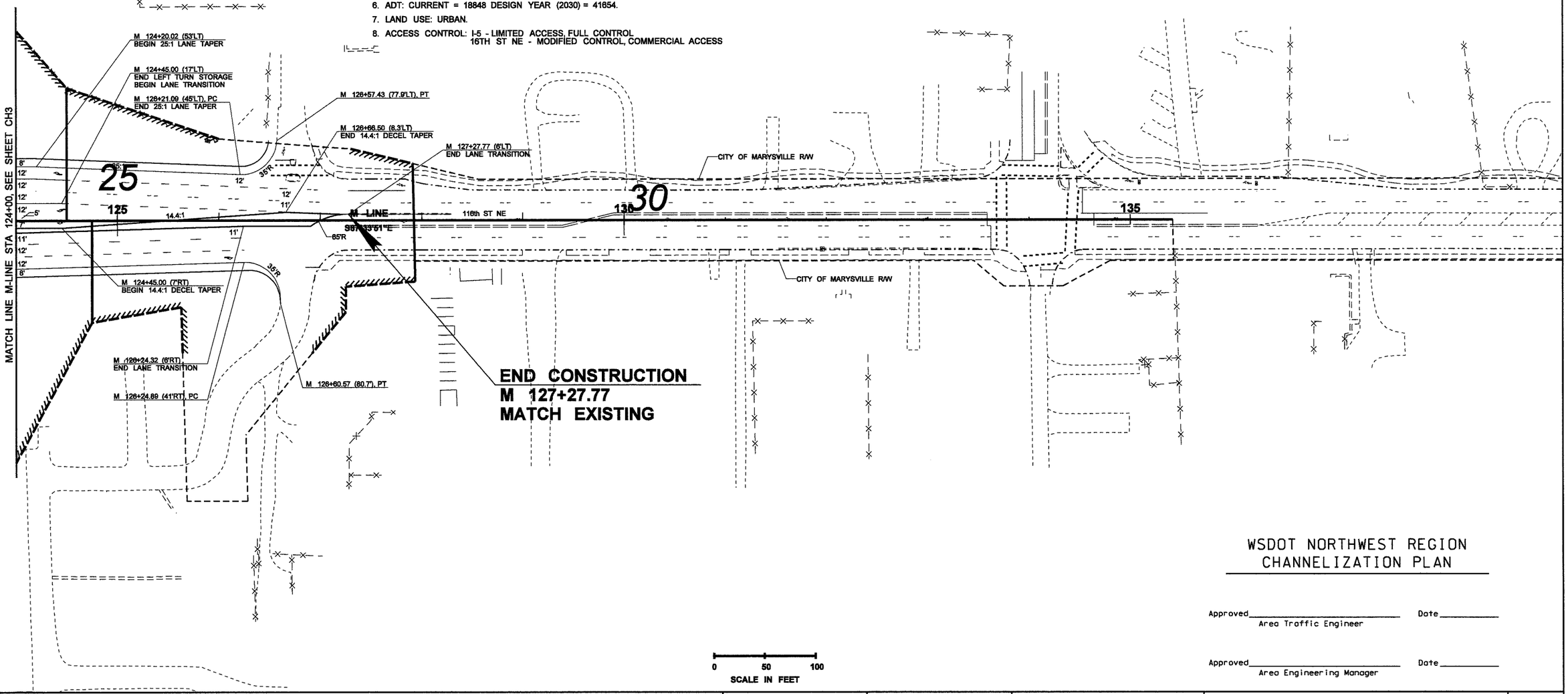

WSDOT NORTHWEST REGION
CHANNELIZATION PLAN

Approved_____ Date_____
Area Traffic Engineer

Approved_____ Date_____
Area Engineering Manager

FILE NAME	P:\CAD\1598 - Tulalip Tribes\554-1598-026\Phase 17 - 116th IC Design\CHAN\CH001_Ult.dgn					
TIME	12:46:06 PM					
DATE	12/31/2008					
PLOTTED BY	tsunmic					
DESIGNED BY	E. YIU					
ENTERED BY	B. PURGANAN					
CHECKED BY	H. LONGFELLOW					
PROJ. ENGR.	M. ABU-NAJEM					
REGIONAL ADM.	L. ENG	REVISION	DATE	BY		

REGION NO.	STATE	FED.AID PROJ.NO.
10	WASH	
JOB NUMBER		
CONTRACT NO.		LOCATION NO.

P.E. STAMP BOX DATE

HARRY DAVID LONGFELLOW, STATE OF WASHINGTON, 37902, REGISTERED PROFESSIONAL ENGINEER
EXPIRES 12/23/ DATE
P.E. STAMP BOX

THE TULALIP TRIBES
Parametrix

I-5 MP 201.95 TO MP 202.99
I-5 116TH ST NE INTERCHANGE
CHANNELIZATION AND WIDENING
SNOHOMISH COUNTY NOVEMBER 2007
CHANNELIZATION PLAN

Plot 7
CH7
SHEET OF SHEETS

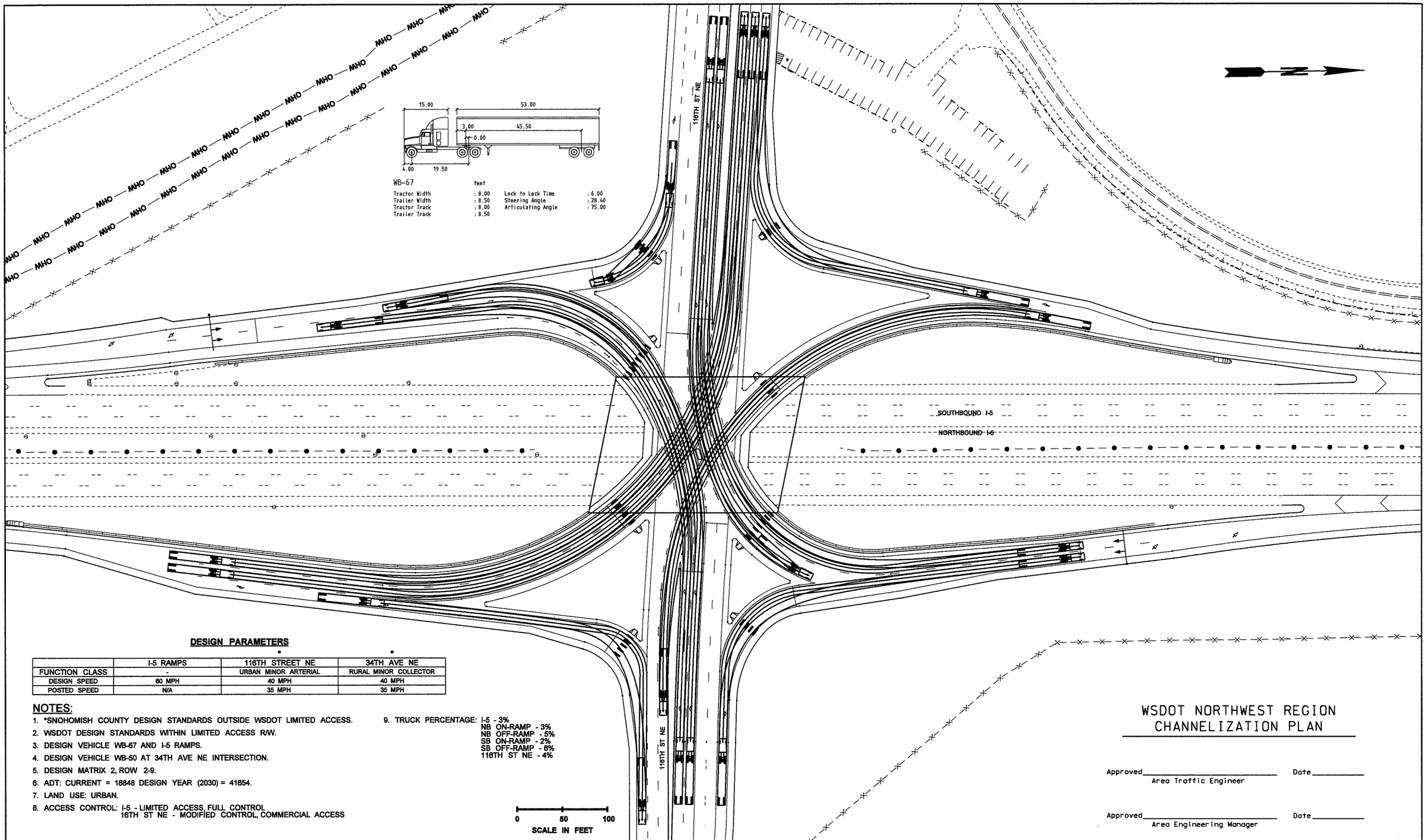

DESIGN PARAMETERS

	I-5 RAMPS	116TH STREET NE *	34TH AVE NE *
FUNCTION CLASS	-	URBAN MINOR ARTERIAL	RURAL MINOR COLLECTOR
DESIGN SPEED	60 MPH	40 MPH	40 MPH
POSTED SPEED	N/A	35 MPH	35 MPH

NOTES:

1. *SNOHOMISH COUNTY DESIGN STANDARDS OUTSIDE WSDOT LIMITED ACCESS.
2. WSDOT DESIGN STANDARDS WITHIN LIMITED ACCESS R/W.
3. DESIGN VEHICLE WB-67 AND I-5 RAMPS.
4. DESIGN VEHICLE WB-50 AT 34TH AVE NE INTERSECTION.
5. DESIGN MATRIX 2, ROW 2-9.
6. ADT: CURRENT = 18848 DESIGN YEAR (2030) = 41654.
7. LAND USE: URBAN.
8. ACCESS CONTROL: I-5 - LIMITED ACCESS, FULL CONTROL
   16TH ST NE - MODIFIED CONTROL, COMMERCIAL ACCESS
9. TRUCK PERCENTAGE: I-5 - 3%
   NB ON-RAMP - 3%
   NB OFF-RAMP - 5%
   SB ON-RAMP - 2%
   SB OFF-RAMP - 6%
   116TH ST NE - 4%

WSDOT NORTHWEST REGION
CHANNELIZATION PLAN

Approved_____ Date_____
Area Traffic Engineer

Approved_____ Date_____
Area Engineering Manager

FILE NAME	P:\CAD\1598 - Tulalip Tribes\554-1598-026\Phase 17 - 116th IC Design\CHAN\CH001_Ult.dgn				REGION NO.	STATE	FED.AID PROJ.NO.
TIME	12:46:07 PM				10	WASH	
DATE	12/31/2008				JOB NUMBER		
PLOTTED BY	tsunmic						
DESIGNED BY	E. YIU						
ENTERED BY	B. PURGANAN				CONTRACT NO.		LOCATION NO.
CHECKED BY	H. LONGFELLOW						
PROJ. ENGR.	M. ABU-NAJEM						
REGIONAL ADM.	L. ENG	REVISION	DATE	BY			

DATE
P.E. STAMP BOX

HARRY DAVID LONGFELLOW
STATE OF WASHINGTON
37902
REGISTERED
PROFESSIONAL ENGINEER
EXPIRES 12/23/
DATE
P.E. STAMP BOX

THE TULALIP TRIBES

Parametrix

I-5 MP 201.95 TO MP 202.99
I-5 116TH ST NE INTERCHANGE
CHANNELIZATION AND WIDENING
SNOHOMISH COUNTY NOVEMBER 2007

CHANNELIZATION PLAN

Plot 8
CH8
SHEET
OF
SHEETS

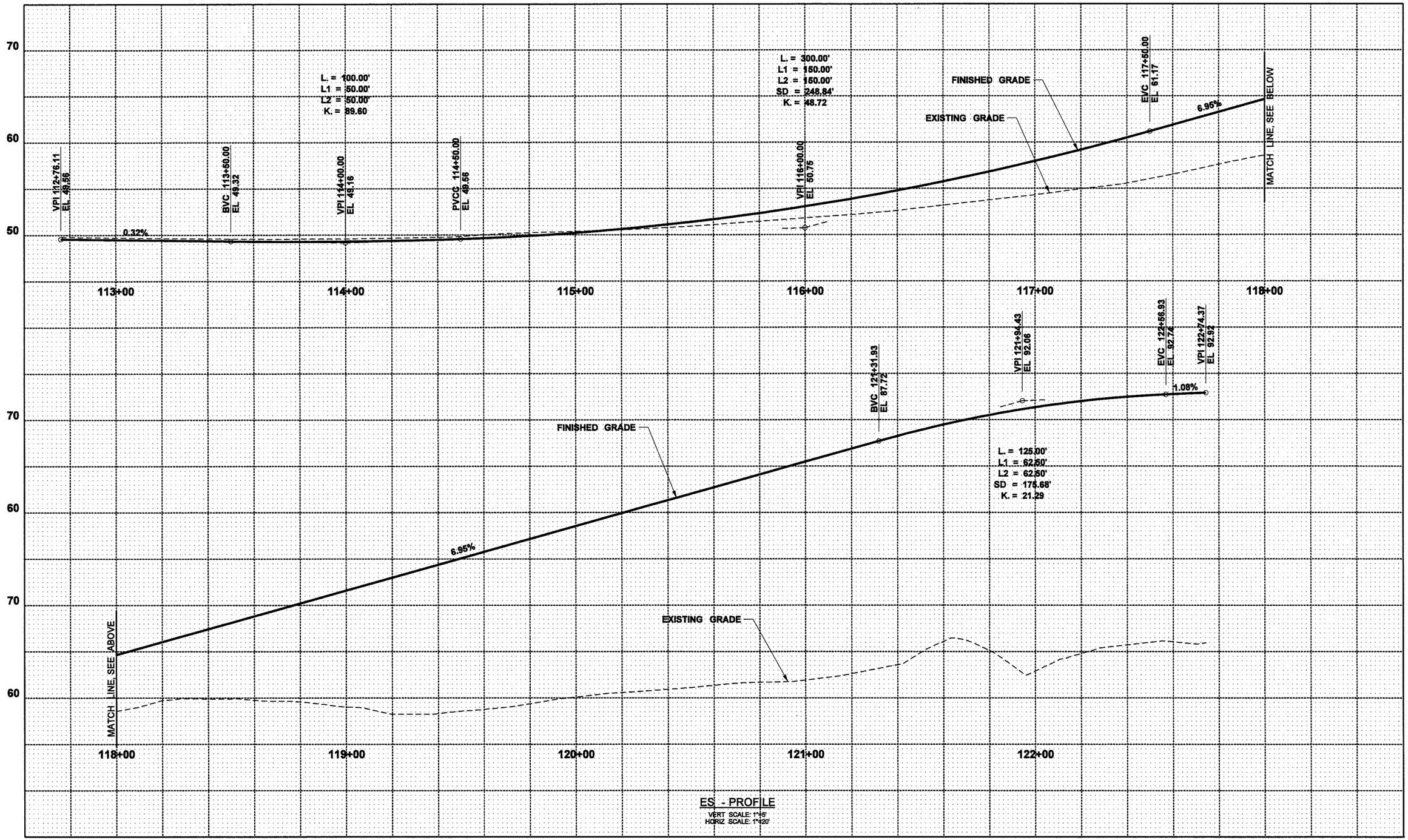

ES - PROFILE

VERT SCALE: 1"=5'
HORIZ SCALE: 1"=20'

FILE NAME	P:\CAD\1598 - Tulalip Tribes\554-1598-026\Phase 17 - 116th IC Design\CHAN\RP001_Ult.dgn						
TIME	12:54:01 PM				REGION NO. 10	STATE WASH	FED.AID PROJ.NO.
DATE	12/31/2008						
PLOTTED BY	tsunmic				JOB NUMBER		
DESIGNED BY	E. YIU						
ENTERED BY	B. PURGANAN						
CHECKED BY	H. LONGFELLOW				CONTRACT NO.		LOCATION NO.
PROJ. ENGR.	M. ABU-NAJEM						
REGIONAL ADM.	L. ENG	REVISION	DATE	BY			

P.E. STAMP BOX DATE

HAPPY DAVID LONGFELLOW — STATE OF WASHINGTON — 37902 — REGISTERED PROFESSIONAL ENGINEER

EXPIRES 12/23/

P.E. STAMP BOX DATE

THE TULALIP TRIBES

Parametrix

I-5 MP 201.95 TO MP 202.99

I-5 116TH ST NE INTERCHANGE
CHANNELIZATION AND WIDENING
SNOHOMISH COUNTY NOVEMBER 2007

ROADWAY PROFILES

Plot 1

RP1

SHEET OF SHEETS

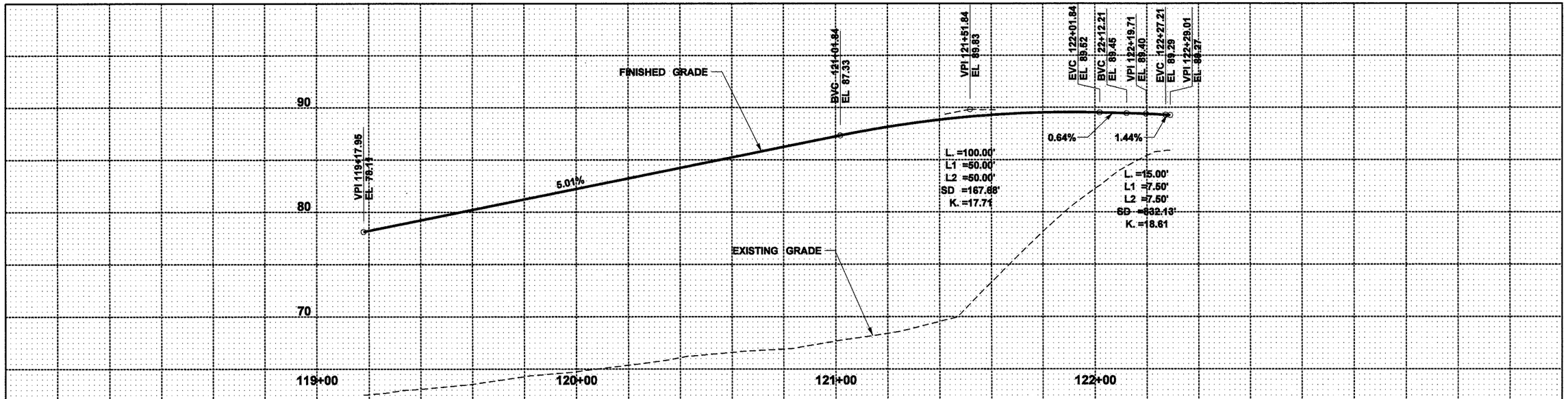

SE - PROFILE

VERT SCALE: 1"=5'
HORIZ SCALE: 1"=20'

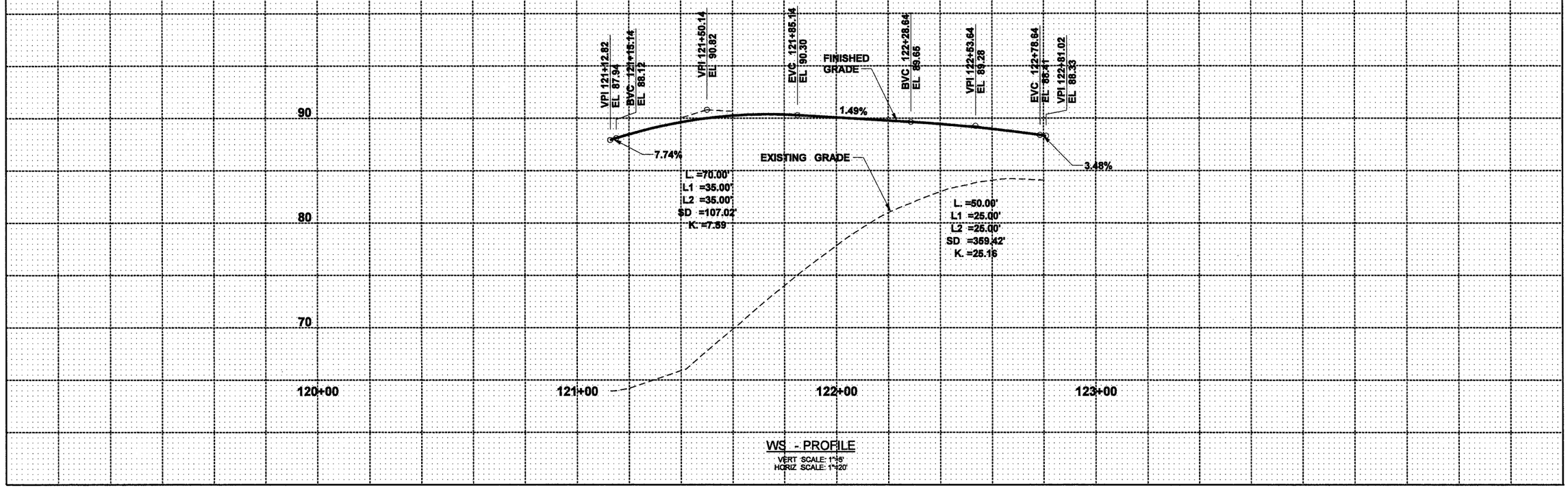

WS - PROFILE

VERT SCALE: 1"=5'
HORIZ SCALE: 1"=20'

FILE NAME	P:\CAD\1598 - Tulalip Tribes\554-1598-026\Phase 17 - 116th IC Design\CHAN\RP001_Ult.dgn				REGION NO.	STATE	FED.AID PROJ.NO.
TIME	12:54:03 PM				10	WASH	
DATE	12/31/2008				JOB NUMBER		
PLOTTED BY	tsunmic						
DESIGNED BY	E. YIU				CONTRACT NO.		LOCATION NO.
ENTERED BY	B. PURGANAN						
CHECKED BY	H. LONGFELLOW						
PROJ. ENGR.	M. ABU-NAJEM						
REGIONAL ADM.	L. ENG	REVISION	DATE	BY			

P.E. STAMP BOX DATE

HARRY DAVID LONGFELLOW — STATE OF WASHINGTON — 37902 — REGISTERED PROFESSIONAL ENGINEER
EXPIRES 12/23/ DATE
P.E. STAMP BOX

THE TULALIP TRIBES

Parametrix

I-5 MP 201.95 TO MP 202.99
I-5 116TH ST NE INTERCHANGE
CHANNELIZATION AND WIDENING
SNOHOMISH COUNTY NOVEMBER 2007

ROADWAY PROFILES

Plot 2
RP2

SHEET OF SHEETS

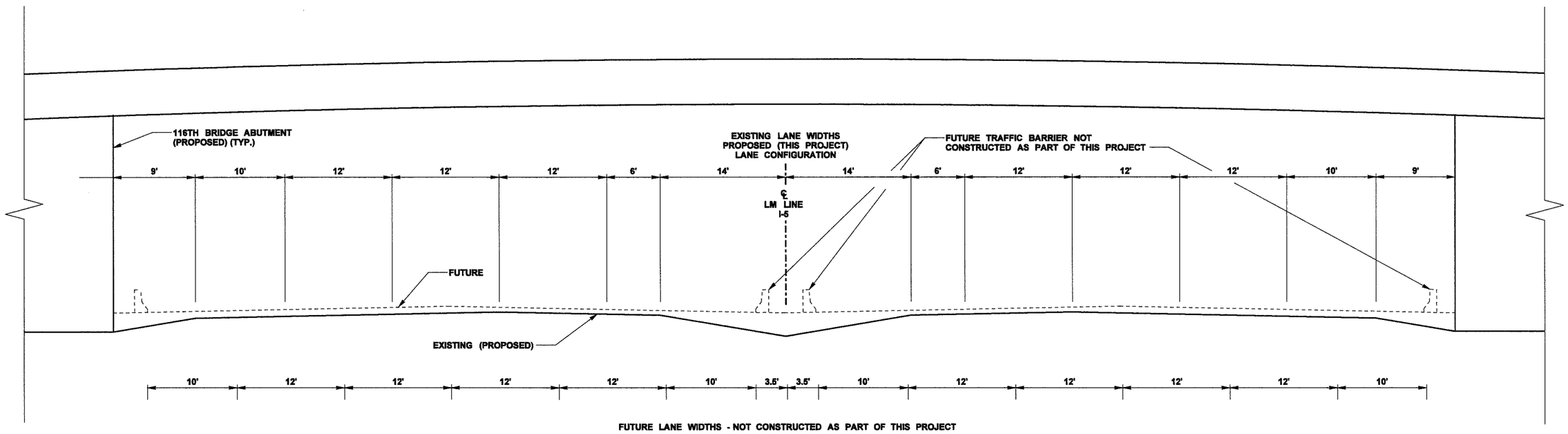

I-5 LINE

FILE NAME	P:\CAD\1598 - Tulalip Tribes\554-1598-026\Phase 17 - 116th IC Design\CHAN\RS001_Ult.dgn				REGION NO.	STATE	FED.AID PROJ.NO.
TIME	12:54:29 PM				10	WASH	
DATE	12/31/2008				JOB NUMBER		
PLOTTED BY	tsunmic						
DESIGNED BY	E. YIU						
ENTERED BY	B. PURGANAN						
CHECKED BY	H. LONGFELLOW				CONTRACT NO.		LOCATION NO.
PROJ. ENGR.	M. ABU-NAJEM						
REGIONAL ADM.	L. ENG	REVISION	DATE	BY			

DATE
P.E. STAMP BOX

HAPPY DAVID LONGFELLOW STATE OF WASHINGTON 37903 REGISTERED PROFESSIONAL ENGINEER
EXPIRES 12/23/
DATE
P.E. STAMP BOX

THE TULALIP TRIBES

Parametrix

I-5 MP 201.95 TO MP 202.99
I-5 116TH ST NE INTERCHANGE
CHANNELIZATION AND WIDENING
SNOHOMISH COUNTY NOVEMBER 2007

TYPICAL SECTIONS

Plot 1
RS1
SHEET OF SHEETS

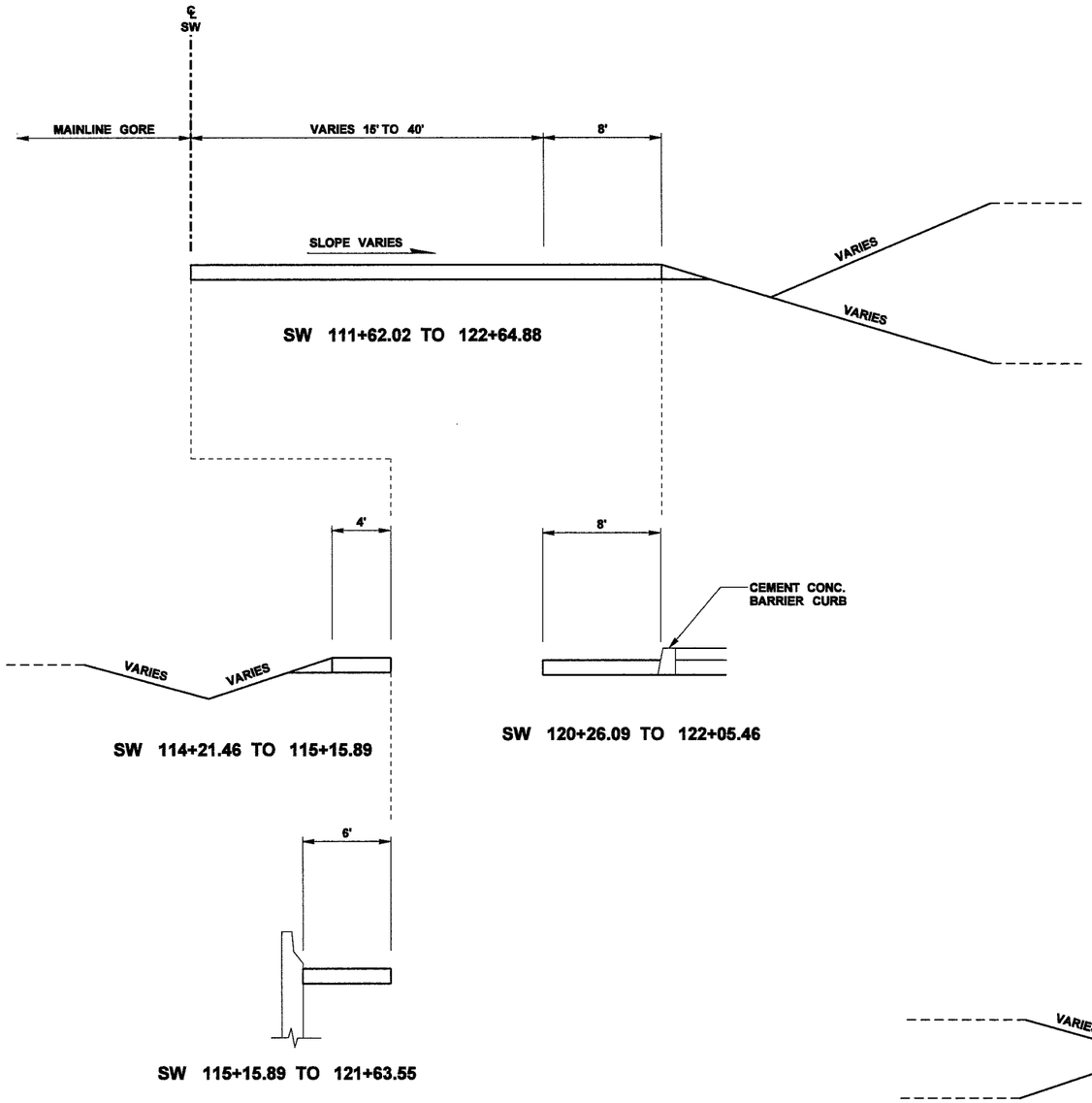

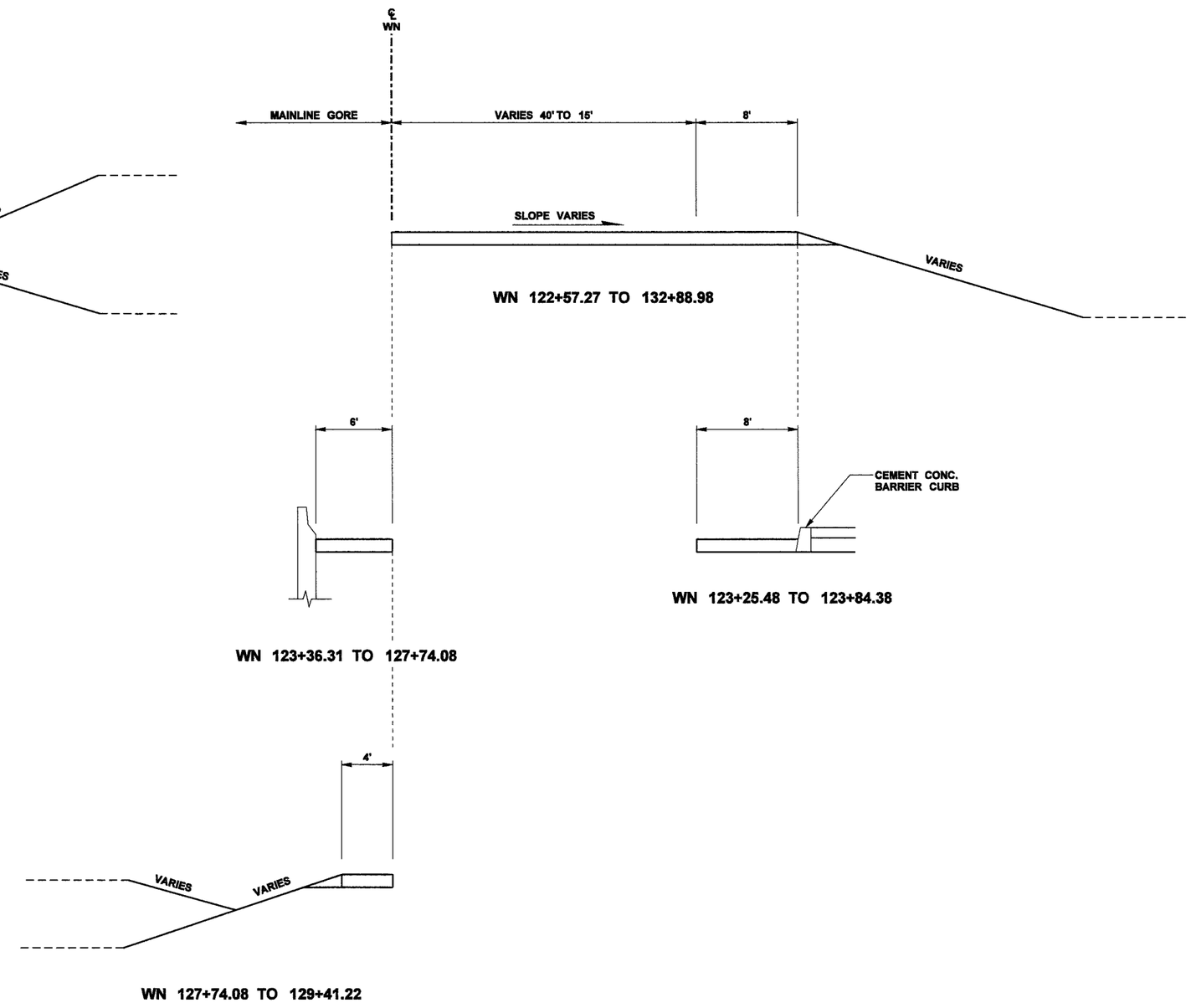

SW LINE

WN LINE

FILE NAME	P:\CAD\1598 - Tulalip Tribes\554-1598-026\Phase 17 - 116th IC Design\CHAN\RS001_Ult.dgn					
TIME	12:54:30 PM				REGION NO. 10	STATE WASH	FED.AID PROJ.NO.
DATE	12/31/2008					
PLOTTED BY	tsunmic					
DESIGNED BY	E. YIU				JOB NUMBER	
ENTERED BY	B. PURGANAN					
CHECKED BY	H. LONGFELLOW				CONTRACT NO.	LOCATION NO.
PROJ. ENGR.	M. ABU-NAJEM					
REGIONAL ADM.	L. ENG	REVISION	DATE	BY		

P.E. STAMP BOX DATE

HAPPY DAVID LONGFELLOW STATE OF WASHINGTON 37500 REGISTERED PROFESSIONAL ENGINEER
EXPIRES 12/23/
P.E. STAMP BOX DATE

THE TULALIP TRIBES

Parametrix

I-5 MP 201.95 TO MP 202.99
I-5 116TH ST NE INTERCHANGE
CHANNELIZATION AND WIDENING
SNOHOMISH COUNTY NOVEMBER 2007

TYPICAL SECTIONS

Plot 2
RS2
SHEET OF SHEETS

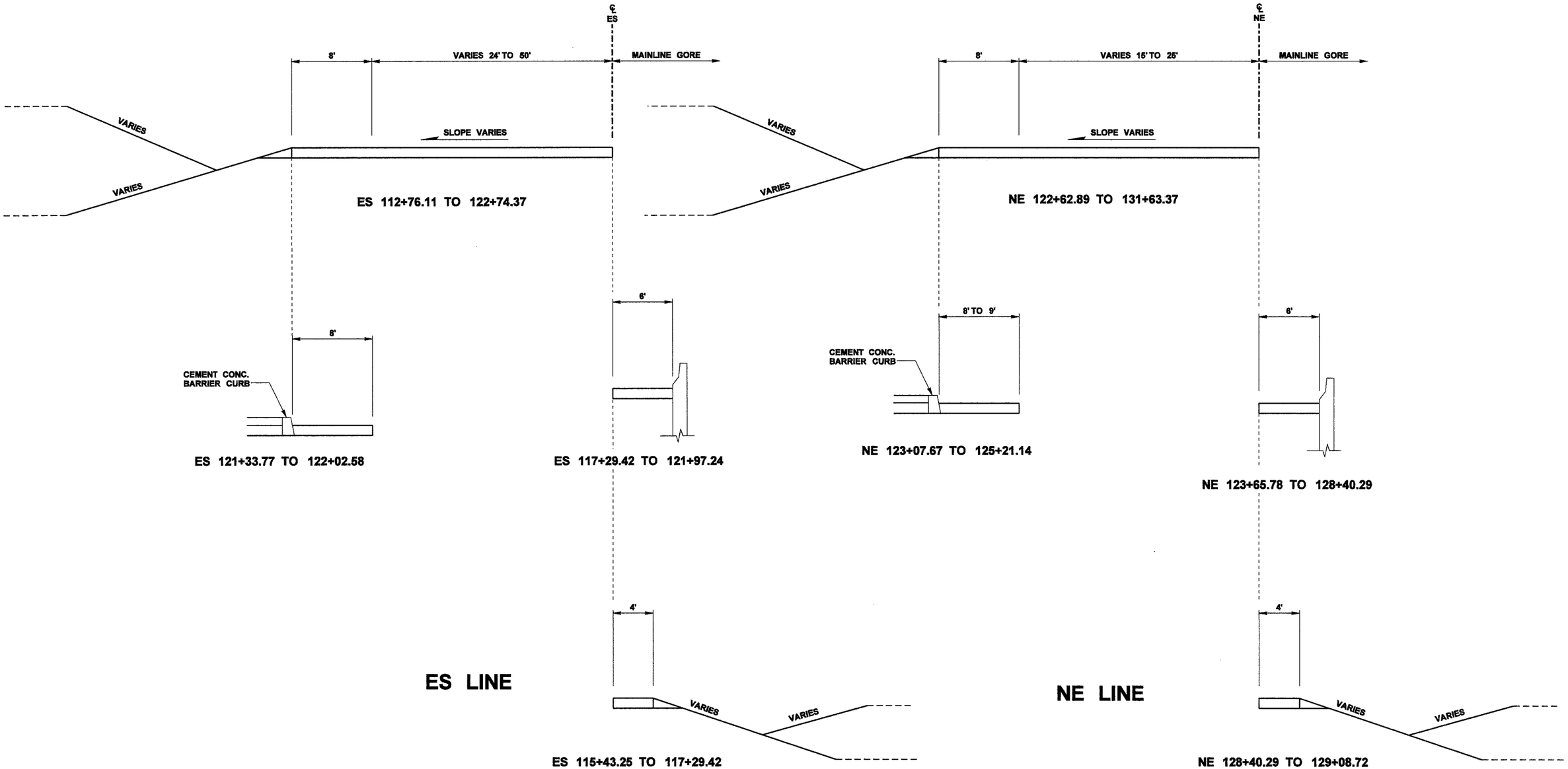

FILE NAME	P:\CAD\1598 - Tulalip Tribes\554-1598-026\Phase 17 - 116th IC Design\CHAN\RS001_Ult.dgn						
TIME	12:54:31 PM				REGION NO.	STATE	FED.AID PROJ.NO.
DATE	12/31/2008				10	WASH	
PLOTTED BY	tsunmic				JOB NUMBER		
DESIGNED BY	E. YIU						
ENTERED BY	B. PURGANAN						
CHECKED BY	H. LONGFELLOW				CONTRACT NO.		LOCATION NO.
PROJ. ENGR.	M. ABU-NAJEM						
REGIONAL ADM.	L. ENG	REVISION	DATE	BY			

DATE
P.E. STAMP BOX

HARRY DAVID LONGFELLOW
STATE OF WASHINGTON
37902
REGISTERED
PROFESSIONAL ENGINEER
EXPIRES 12/23/
DATE
P.E. STAMP BOX

THE TULALIP TRIBES

Parametrix

I-5 MP 201.95 TO MP 202.99
I-5 116TH ST NE INTERCHANGE
CHANNELIZATION AND WIDENING
SNOHOMISH COUNTY NOVEMBER 2007

TYPICAL SECTIONS

Plot 3
RS3
SHEET
OF
SHEETS

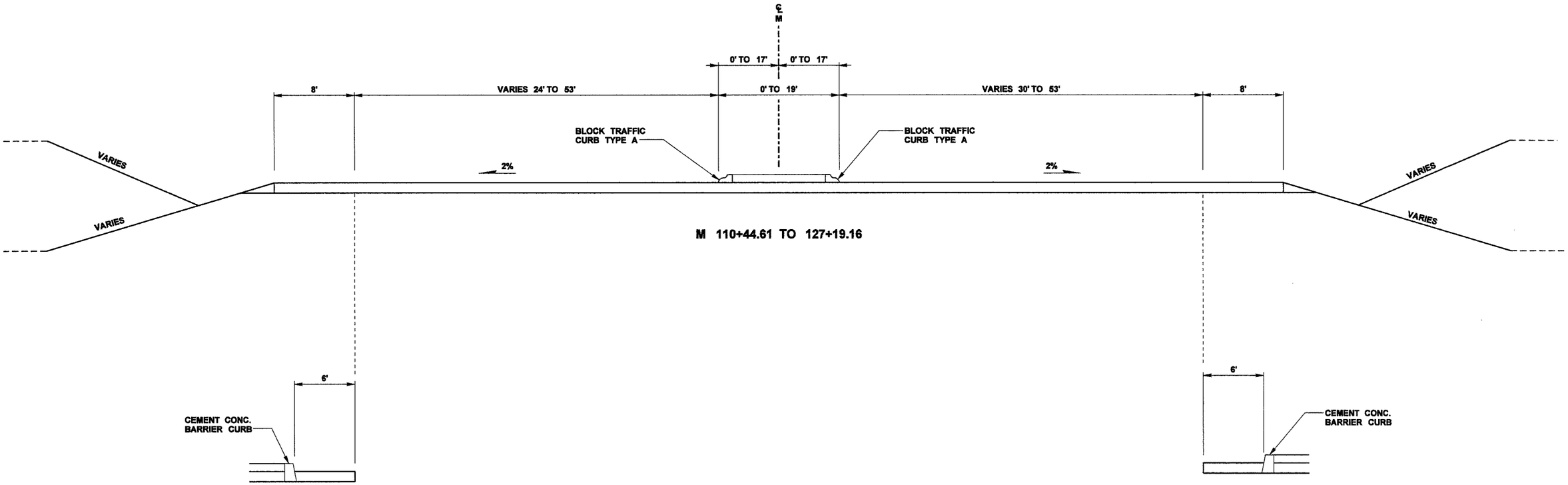

M 117+48.48 TO 119+34.34
M 121+02.70 TO 121+93.03

M 117+90.49 TO 118+93.50
M 120+88.61 TO 122+18.00

M LINE

FILE NAME	P:\CAD\1598 - Tulalip Tribes\554-1598-026\Phase 17 - 116th IC Design\CHAN\RS001_Ult.dgn						
TIME	12:54:31 PM				REGION NO.	STATE	FED.AID PROJ.NO.
DATE	12/31/2008				10	WASH	
PLOTTED BY	tsunmic				JOB NUMBER		
DESIGNED BY	E. YIU						
ENTERED BY	B. PURGANAN						
CHECKED BY	H. LONGFELLOW				CONTRACT NO.		LOCATION NO.
PROJ. ENGR.	M. ABU-NAJEM						
REGIONAL ADM.	L. ENG	REVISION	DATE	BY			

P.E. STAMP BOX DATE

HAPPY DAVID LONGFELLOW STATE OF WASHINGTON 37902 REGISTERED PROFESSIONAL ENGINEER

EXPIRES 12/23/

P.E. STAMP BOX DATE

THE TULALIP TRIBES

Parametrix

I-5 MP 201.95 TO MP 202.99
I-5 116TH ST NE INTERCHANGE
CHANNELIZATION AND WIDENING
SNOHOMISH COUNTY NOVEMBER 2007

TYPICAL SECTIONS

Plot 4

RS4

SHEET OF SHEETS

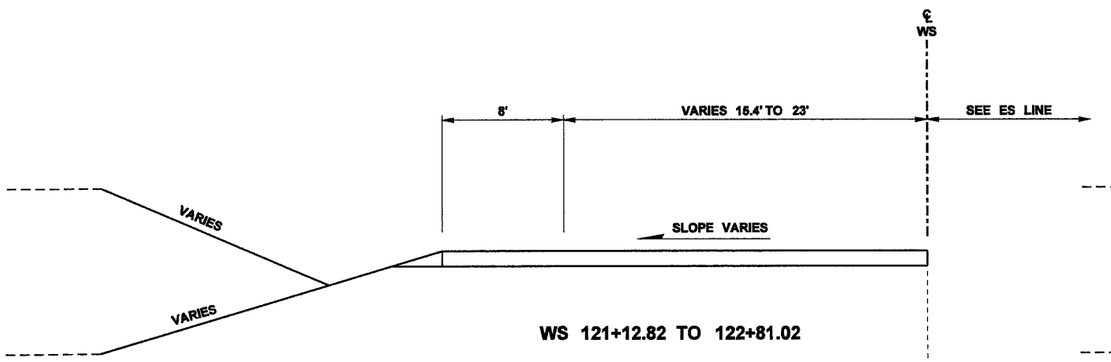

WS 121+12.82 TO 122+81.02

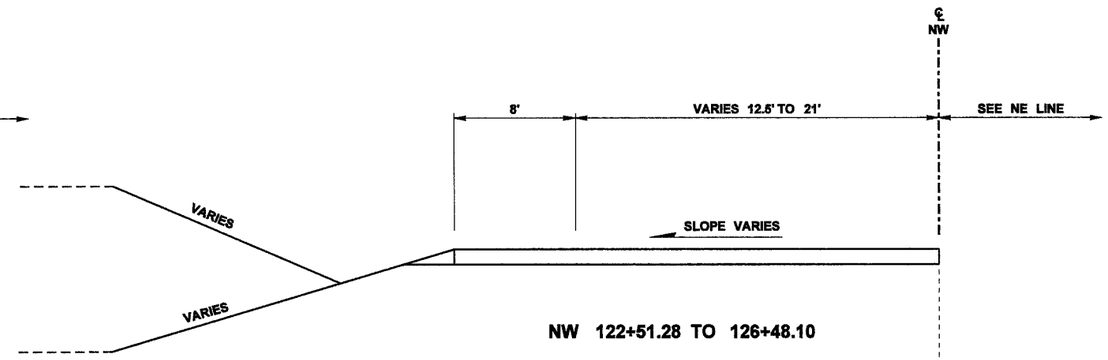

NW 122+51.28 TO 126+48.10

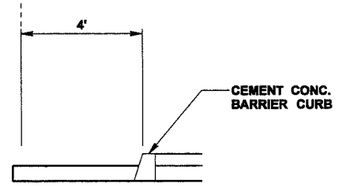

WS LINE

WS 121+41.21 TO 122+27.30

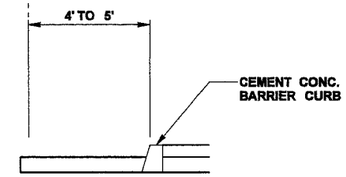

NW LINE

NW 123+01.45 TO 125+14.98

FILE NAME	P:\CAD\1598 - Tulalip Tribes\554-1598-026\Phase 17 - 116th IC Design\CHAN\RS001_Ult.dgn				REGION NO.	STATE	FED.AID PROJ.NO.
TIME	12:54:32 PM				10	WASH	
DATE	12/31/2008				JOB NUMBER		
PLOTTED BY	tsunmic						
DESIGNED BY	E. YIU						
ENTERED BY	B. PURGANAN						
CHECKED BY	H. LONGFELLOW				CONTRACT NO.		LOCATION NO.
PROJ. ENGR.	M. ABU-NAJEM						
REGIONAL ADM.	L. ENG	REVISION	DATE	BY			

P.E. STAMP BOX DATE

HARRY DAVID LONGFELLOW STATE OF WASHINGTON 37902 REGISTERED PROFESSIONAL ENGINEER
EXPIRES 12/23/
P.E. STAMP BOX DATE

THE TULALIP TRIBES

Parametrix

I-5 MP 201.95 TO MP 202.99
I-5 116TH ST NE INTERCHANGE
CHANNELIZATION AND WIDENING
SNOHOMISH COUNTY NOVEMBER 2007

TYPICAL SECTIONS

Plot 5
RS5
SHEET OF SHEETS

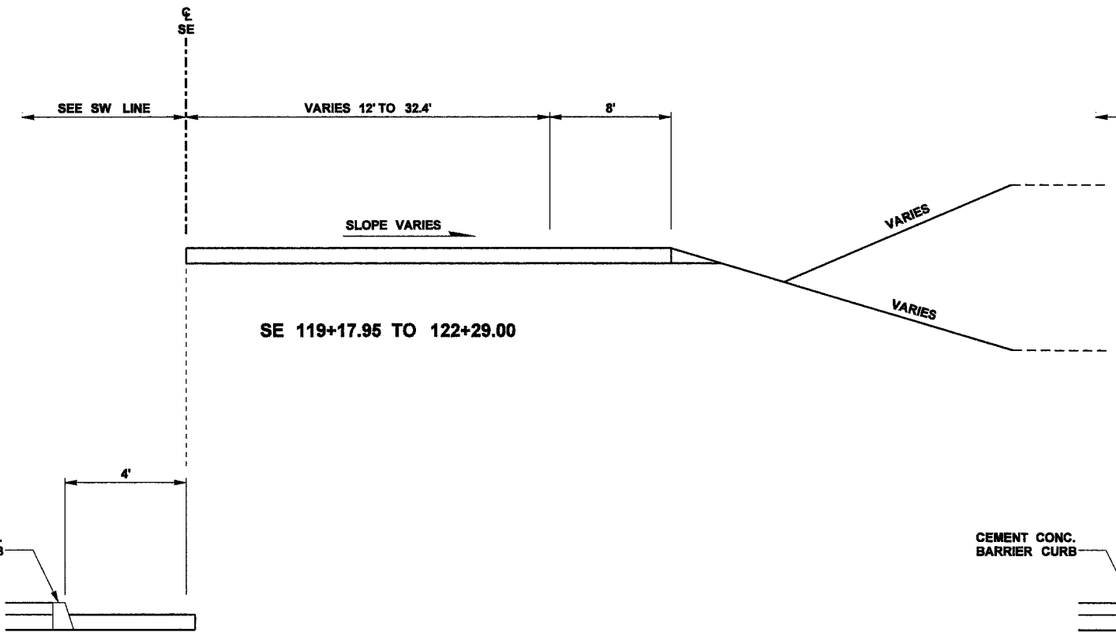

SE 120+36.04 TO 122+10.94

SE LINE

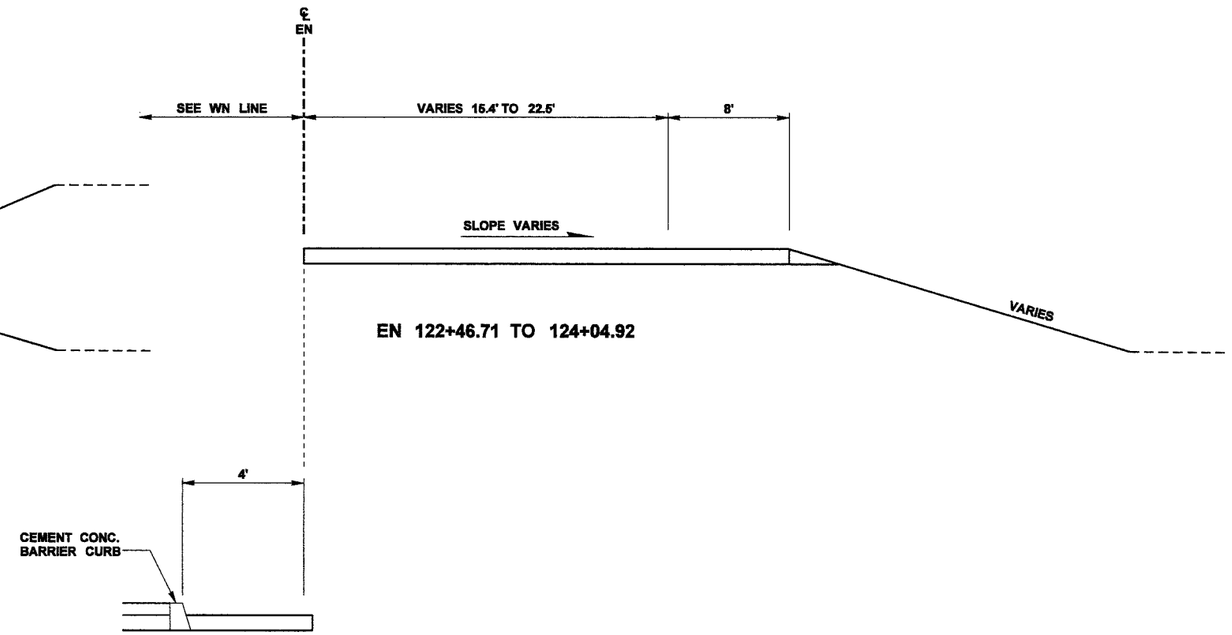

EN 123+00.99 TO 123+77.79

EN LINE

FILE NAME	P:\CAD\1598 - Tulalip Tribes\554-1598-026\Phase 17 - 116th IC Design\CHAN\RS001_Ult.dgn						
TIME	12:54:32 PM				REGION NO. 10	STATE WASH	FED.AID PROJ.NO.
DATE	12/31/2008						
PLOTTED BY	tsunmic						
DESIGNED BY	E. YIU				JOB NUMBER		
ENTERED BY	B. PURGANAN						
CHECKED BY	H. LONGFELLOW				CONTRACT NO.		LOCATION NO.
PROJ. ENGR.	M. ABU-NAJEM						
REGIONAL ADM.	L. ENG	REVISION	DATE	BY			

DATE
P.E. STAMP BOX

HAPPY DAVID LONGFELLOW
STATE OF WASHINGTON
37902
REGISTERED
PROFESSIONAL ENGINEER
EXPIRES 12/23/
DATE
P.E. STAMP BOX

THE TULALIP TRIBES

Parametrix

I-5 MP 201.95 TO MP 202.99
I-5 116TH ST NE INTERCHANGE
CHANNELIZATION AND WIDENING
SNOHOMISH COUNTY NOVEMBER 2007

TYPICAL SECTIONS

Plot 6
RS6
SHEET
OF
SHEETS

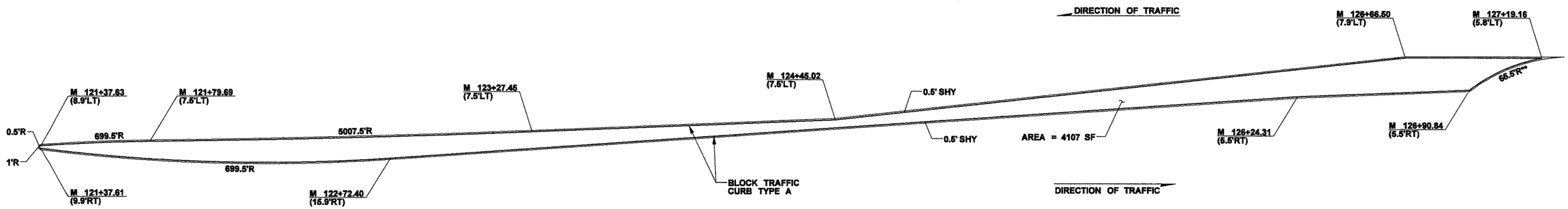

RAISED MEDIAN DETAIL

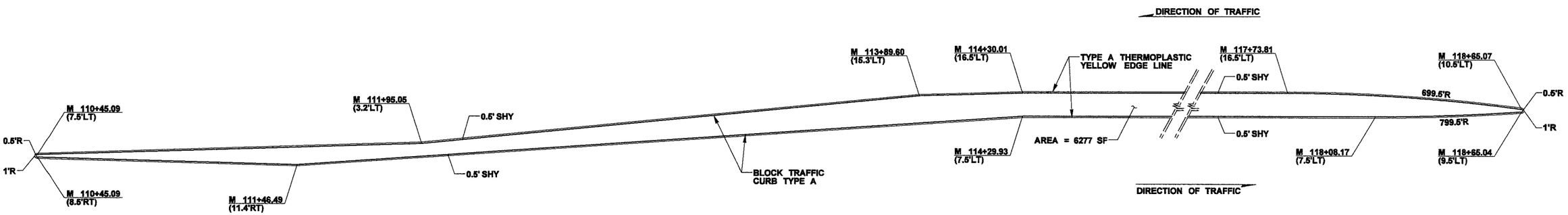

RAISED MEDIAN DETAIL

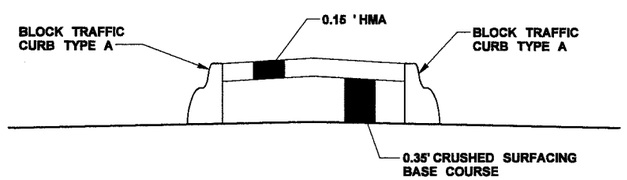

RAISED MEDIAN SECTION

NOT TO SCALE

0 20 40
SCALE IN FEET

FILE NAME	P:\CAD\1598 - Tulalip Tribes\554-1598-026\Phase 17 - 116th IC Design\CHAN\RS001_Ult.dgn				REGION NO.	STATE	FED.AID PROJ.NO.
TIME	12:64:33 PM				10	WASH	
DATE	12/31/2008				JOB NUMBER		
PLOTTED BY	tsunmic						
DESIGNED BY	E. YIU						
ENTERED BY	B. PURGANAN				CONTRACT NO.		LOCATION NO.
CHECKED BY	H. LONGFELLOW						
PROJ. ENGR.	M. ABU-NAJEM						
REGIONAL ADM.	L. ENG	REVISION	DATE	BY			

DATE
P.E. STAMP BOX

HARRY DAVID LONGFELLOW
STATE OF WASHINGTON
37902
REGISTERED
PROFESSIONAL ENGINEER
EXPIRES 12/23/
DATE
P.E. STAMP BOX

THE TULALIP TRIBES

Parametrix

I-5 MP 201.95 TO MP 202.99
I-5 116TH ST NE INTERCHANGE
CHANNELIZATION AND WIDENING
SNOHOMISH COUNTY NOVEMBER 2007

ISLAND DETAILS

Plot 7
RS7
SHEET
OF
SHEETS